MADE IN USA

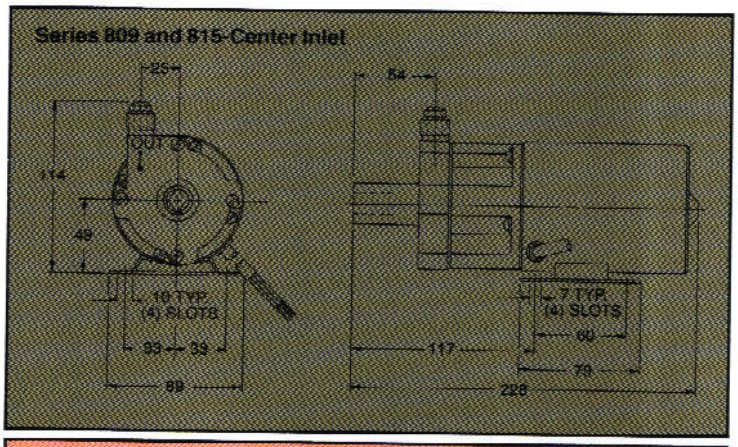

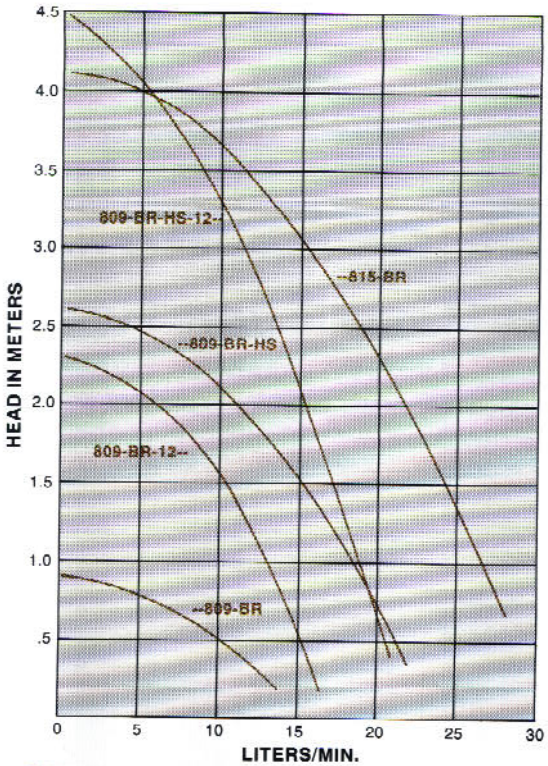

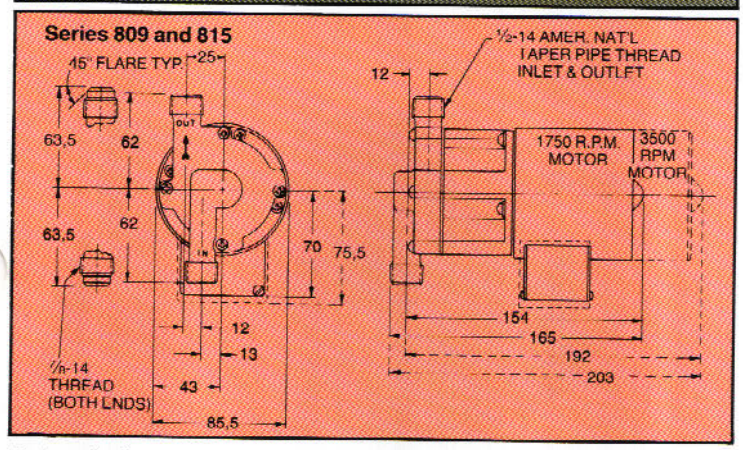

Photographs, dimensional drawings and flow curves may vary depending on the current motors being used. Contact your local distributor for accurate current data for layout purposes.

ELECTRIC MOTORS

Model	Max. Flow LPM	Max. Head M	Inlet★ C Indicates Center Inlet	Outlet★	KW	RPM	Volts	PH	Hz	Watts	Amp	Motor Type	Electrical Connection	Materials◆ in Contact with Solution	Max. Int. Press bar	Max. Liquid Temp. °C	Wt. Packed KG
809-BR★★	13,7	,6	1/2"MPT	1/2"MPT								AC	Conduit Box		10	121	2,3
809-PL★★	13,7	,6	1/2"MPT	1/2"MPT	.007	1400	230	1	50	28	.20	AC	Conduit Box		3,4	121	1,8
809-BR-C	13,7	,6	C3/8"FPT	1/2"MPT								AC	.9 M SJO		10	121	2,7
809-BR-BB	13,7	,6	1/2"MPT	1/2"MPT								AC/BB	Conduit Box		10	121	2,3
809-BR-24	13,7	,6	1/2"MPT	1/2"MPT	.007	1700	24	1	60	24	1.5	AC	Conduit Box		10	121	2,3
809-BR-12•	16,5	2,3	1/2"MPT	1/2"MPT	.007	1950	12	—	DC	18	1.5	AC	Terminals		10	121	2
809-BR-24	16,5	2,3	1/2"MPT	1/2"MPT	.007	1950	24	—	DC	18	.75	AC	Terminals		10	121	2
809-BR-HS	21	2,7	1/2"MPT	1/2"MPT								AC	Conduit Box	★★Pump Housing BR, is Bronze, PL is Polysulfil Plastic. 316 Stainless Steel Silicon rubber "O" ring, Ryton® and Tellon® Plastic Impeller	10	121	2,5
809-PL-HS	21	2,7	1/2"MPT	1/2"MPT								AC	Conduit Box		3,4	121	2,3
809-BR-HS-C	21	2,7	C3/8"FPT	1/2"MPT	.029	2750	230	1	50	103	.69	AC	.9 M SJO		10	121	3
809-BR-HS-BB	21	2,7	1/2"MPT	1/2"MPT								AC/BB	.9 M SJO		10	121	2,5
809-BR-HS-BB-C	21	2,7	C3/8"FPT	1/2"MPT								AC/BB	.9 M SJO		10	121	3
809-BR-HS-12◇	22	4,5	1/2"MPT	1/2"MPT	.029	3600	12	—	DC	48	3.8	AC	Terminals		10	121	2
809-BR-HS-24	22	4,5	1/2"MPT	1/2"MPT	.029	3600	24	—	DC	48	1.9	AC	Terminals		10	121	2
815-BR	28	4,1	1/2"MPT	1/2"MPT								AC	Conduit Box		10	121	2,5
815-PL	28	4,1	1/2"MPT	1/2"MPT								AC	Conduit Box		3,4	121	2
815-BR-C	28	4,1	C3/8"FPT	1/2"MPT	.029	2750	230	1	50	118	.75	AC	.9 M SJO		10	121	2,7
815-BR-BB	28	4,1	1/2"MPT	1/2"MPT								AC/BB	.9 M SJO		10	121	2,5
815-BR-BB-C	28	4,1	C3/8"FPT	1/2"MPT								AC/BB	.9 M SJO		10	121	2,7

★ Flare style and solder style connections available on special order.
◆ Other materials available on special order.
• Brush life is a minimum of 10,000 hours.
◇ Brush life is a minimum of 7,500 hours

Center inlet housing for 809 Series can be supplied in stainless steel